SOLATUBE 750 DS-C (21 IN / 530 MM) CURB CAP HARD CEILING WITH OPTIONAL INNER DOME

REVISIONS				
ECO	REV.	DESCRIPTION	DATE	INC.
	1	INITIAL RELEASE	3/13/08	CS

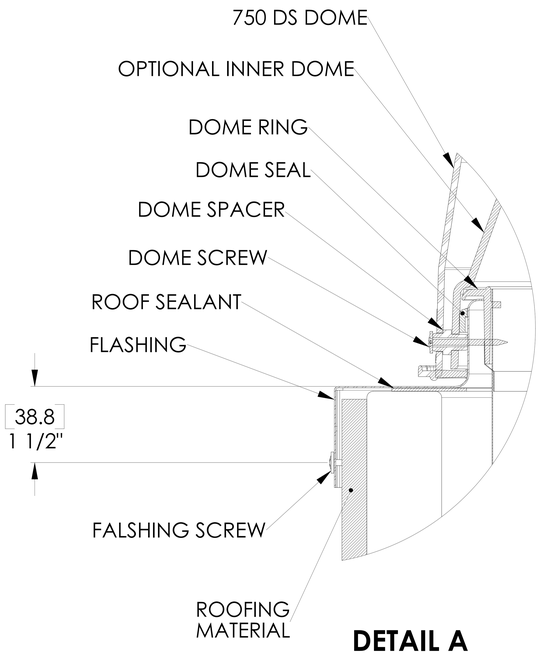

DETAIL A
SCALE 3 : 1

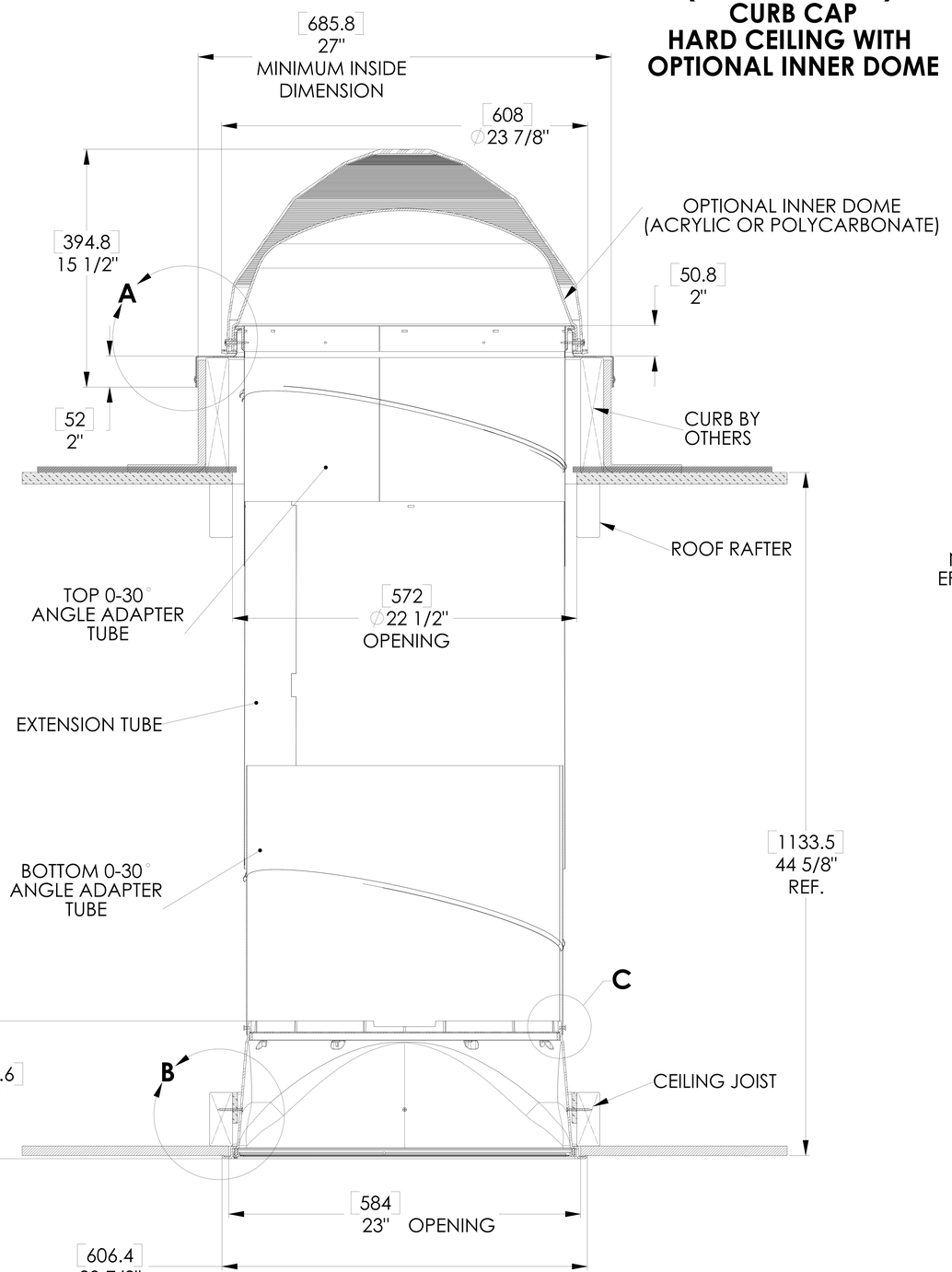

FULL SECTION
SCALE 1:1

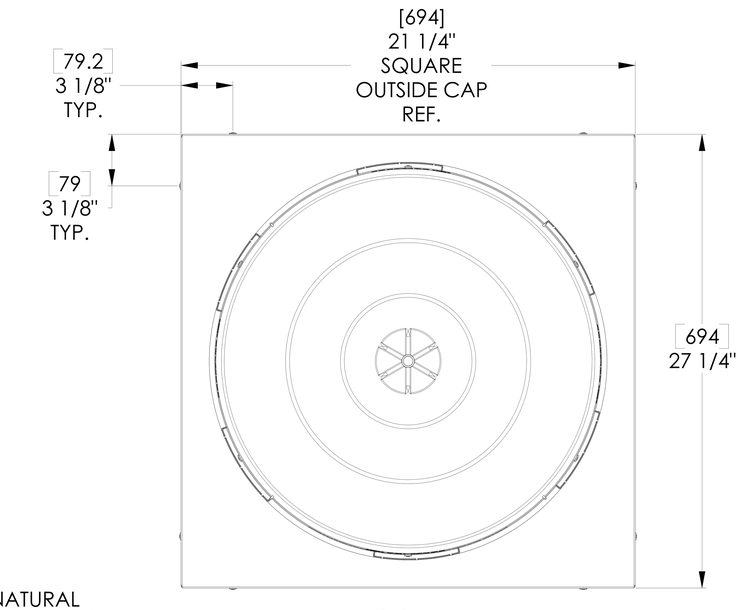

TOP VIEW
SCALE 1:1

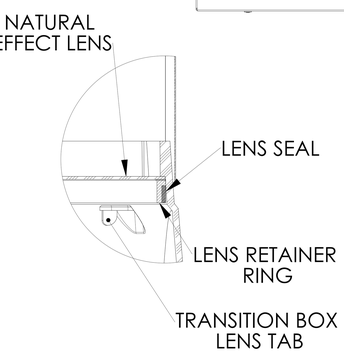

DETAIL C
SCALE 3 : 1

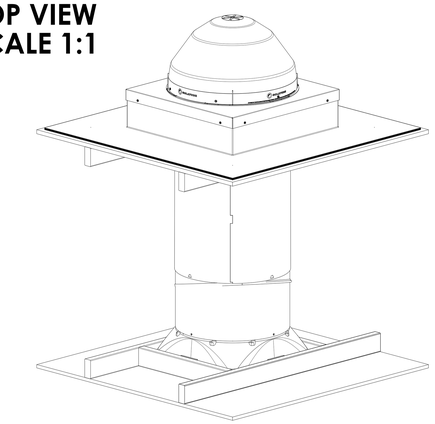

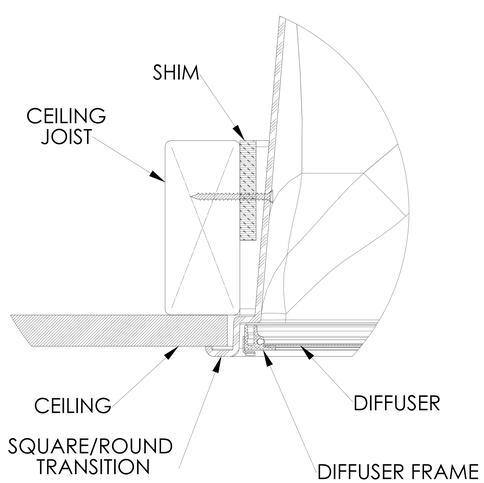

DETAIL B
SCALE 3 : 1

NOTES:

1. STRUCTURAL ELEMENTS (PLYWOOD, RAFTERS, DRYWALL ETC.) BY OTHERS & SHOWN FOR REFERENCE ONLY.
2. ALL TUBE JOINTS & SEAMS TAPED WITH 2" FOIL TAPE (NOT SHOWN).
3. DIMENSIONS IN BRACKETS ARE METRIC UNLESS OTHERWISE SPECIFIED.
4. 6" MIN CLEARANCE SHOULD BE MAINTAINED FROM ALL SOLATUBE COMPONENTS AND OTHER PLENUM COMPONENTS.

UNLESS OTHERWISE SPECIFIED:
DIMENSIONS ARE IN INCHES
TOLERANCES:
ANGULAR: ±0.5°
.X ± .1
.XX ± .02
.XXX ± .005

MATERIAL
--
--

FINISH
--

DO NOT SCALE DRAWING

SOLATUBE INTERNATIONAL, INC.
COPYRIGHT 2008
WWW.SOLATUBE.COM

DRAWN BY: STEVENS — DATE: 7/1/08
CHECKED BY: -- — DATE: --
APPROVED BY: -- — DATE: --

SOLATUBE
2210 OAK RIDGE WAY
VISTA, CALIFORNIA 92081-8341
PH (760) 597-4400

TITLE: 750 DS-C CURB CAP HARD CEILING

SIZE | DWG. NO. WEB-750-CF-HC | REV 1

SCALE: 1:1 | SHEET 1 OF 1